Installation and Maintenance Manual



AIR ENGAGED FRICTION CLUTCHES
END OF SHAFT BORED, PILOT MOUNT
BRONZE BUSHING PILOT

This document applies to the following catalog standard products, and custom versions based upon these models:

C3E2R-STH & C3E2R-STL

C4E2R-STH & C4E2R-STL

C5E2R-STH & C5E2R-STL

C6E2G-STH & C6E2G-STL

PLEASE NOTE
Mach III products are manufactured on a per order basis and may only be returned in cases of warranty defect. We strongly recommend reviewing all new applications with Mach III Engineering staff to ensure suitability of the chosen product for the intended use.

© Mach III Clutch - All Rights Reserved

ADDITIONAL RESOURCES AND SERVICES

PRODUCT DETAIL SHEETS

Click on the product number shown on page 1 of this document for a link to download the product detail sheet which contains dimensional data, torque capacity and other specifications along with parts list and parts kits details. For custom products (part numbers ending in three numeric characters), contact Mach III Engineering.

TECH SUPPORT, 3D MODELS, APPLICATION REVIEW AND SELECTION ASSISTANCE

Mach III Engineering: engineering@machiii.com
859-291-0849

FACTORY REPAIR SERVICE

Clients who want to have a unit evaluated for factory repair service should contact Mach III Customer Service to obtain return materials authorization (RMA). Mach III will evaluate the unit and will issue a quotation if the unit is repairable, or for replacement if the unit is not repairable. Lead time for the repair or replacement will depend upon parts availability and will be included in the quotation.

Mach III Customer Service: orders@machiii.com
859-291-0849

GENERAL SAFETY PRECAUTIONS

WARNING	
	These products include rotating equipment and should be guarded according to OSHA requirements. It is the responsibility of the user to provide the necessary guarding.

WARNING	
	This product can emit a spark and is not recommended for use in any explosive environment.

NEW VERSUS BURNISHED TORQUE

The torque output of a new friction clutch or brake can be up to 40% less than the published torque rating. To achieve full design torque, a unit must be cycled under load to burnish the friction surfaces. The exact number of cycles varies by application. When calculating required torque always use a safety factor of 1.5 to 2. It is not recommended to select a product for use at its maximum rated torque for continuous duty.

PRODUCT SELECTION

Torque capacity is only one factor to consider when making a product selection. Ensure that you will have the right product for the job by contacting our engineering department for application review and selection assistance.

INSTALLATION

1. INSTALLING A SPROCKET OR PULLEY

Mach III units are typically shipped from the factory with the required sprocket or pulley preinstalled. This section pertains only to those who need to install or replace a pulley or sprocket in the field. Please use the links on page one of this document to obtain the detail sheet for your unit. This sheet will include the pilot diameter and other dimensions needed to machine the sprocket or pulley.

Bore the sprocket or pulley for clearance (slide fit) over pilot and drill standard clearance holes for the number and type of screws on corresponding bolt circle. The cap screws used to attach the sprocket or pulley should not be longer than the sum of the depth of the threaded hole plus the thickness of the sprocket or pulley. Otherwise, the cap screws may bottom out. Tighten all screws to uniform torque based on screw size and use proper Loctite® (or equivalent) compound to ensure a permanent mount.

2. CLUTCH INSTALLATION

A. SHAFT PREPARATION & MOUNTING

Mach III Clutch products are bored to fit a precision plug gauge for the specified bore size and should slide fit the mating shaft. Make certain that the shaft is free of burrs or nicks. It may be necessary to file or sand the shaft to assure a slide fit. **Never hammer the clutch onto the shaft.** Hammering on the clutch may cause evident damage or subtle injury that will shorten the wear life of the unit and will void the warranty.

(1) Apply anti-seize (E-Z Break®) lubricant, or equivalent, to the shaft.
(2) Insert key (customer supplied) onto the shaft.
(3) Slide clutch over key on the shaft, align the sprocket or pulley.
(4) Tighten set screws to secure the clutch to the shaft.

B. AIR LINE CONNECTION

Refer to the Product Detail Sheet to determine the NPT or BSPT size and connect an air fitting of the applicable size. Install the fitting using a thread sealing compound to prevent air leakage. ***Do not use rigid piping.*** Flexible air line should always be used.

C. AIR SUPPLY

Mach III products require clean, filtered, pressure regulated air. Air lubricators are neither required nor recommended as all bearings, bushings and seals are lubricated for life upon assembly.

D. FINAL INSPECTION & TESTING

Check alignment of the sprocket or pulley. Cycle the clutch with the machine off to check for air leaks and to ensure proper engagement and release. After a short run, check set screws and alignment.

OPERATION

A. AIR PRESSURE

B. Torque output of this model is proportional to air pressure applied. Refer to the Product Detail Sheet for specifics regarding torque capacity. To achieve the longest possible bearing life, the air pressure supplied to the unit should be regulated to the minimum amount necessary to attain the required torque output. **The maximum operating pressure should not exceed 80 PSI.**

C. CONTAMINATION

The friction material (pads) contained within this product will absorb oil, water, chemicals, and other contaminants. Depending on the type of contamination, clutch may either seize up entirely or lose torque capacity. If friction discs become contaminated, they should be replaced.

Particulate contamination can also cause premature wear of the drive surfaces and seals. If the operating environment is prone to contamination, a custom, covered unit should be considered. Contact Mach III Engineering to explore options.

MAINTENANCE & REPAIR

When installed and operated according to the preceding guidelines, Mach III Clutch products should require little or no routine maintenance. A repair kit is available which contains all parts subject to typical wear: friction discs, springs and O-rings. The following pages provide instructions for installing a repair kit.

When more extensive repairs are required, contact Mach III Engineering for technical support or Mach III Customer Service for factory rebuild options.

PARTS DIAGRAM

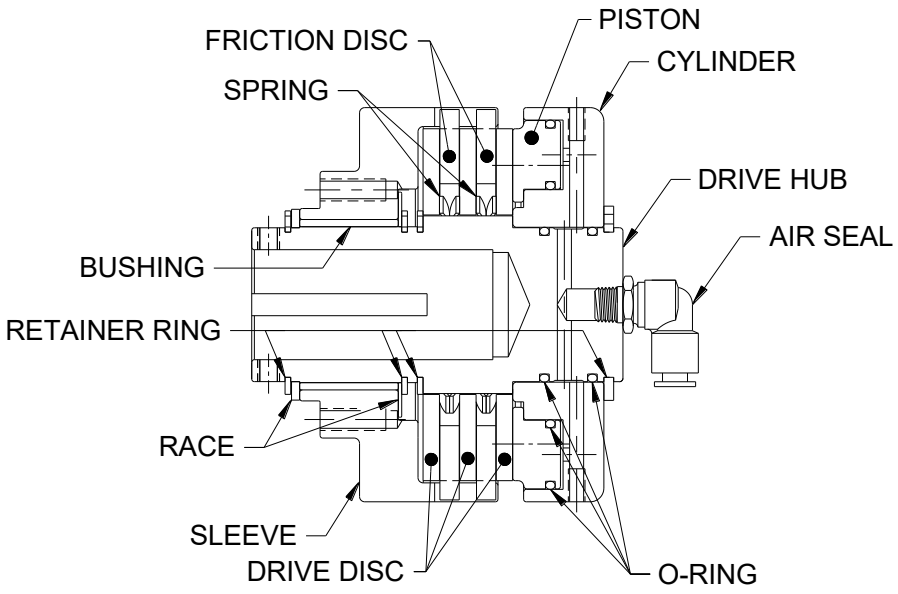

REPAIR KIT INSTALLATION PROCEDURE

TOOLS REQUIRED

Hex Wrench Set
Rubber Mallet or similar soft face hammer
Retainer (snap) Ring Pliers
Scraper

COMPOUNDS REQUIRED

Molykote® G-N Metal Assembly Paste
Dow Corning® #4 Compound
Loctite® #609 Retaining Compound
Anti-Seize Lubricant (for re-installation)

A. DISASSEMBLY

(1) Remove clutch from shaft and place it in a vertical position with cylinder side facing upward.
(2) Remove air seal and outer retainer ring.
(3) Remove air cylinder with piston from drive hub.
(4) The disc package (consisting of friction discs, drive discs & springs) will now be accessible.

B. FRICTION DISC & SPRING REPLACEMENT

(1) Remove the drive discs, springs and friction discs.
(2) Drive discs should be clean, dry and free of burrs or nicks.
(3) Apply a thin coating of Molykote® G-N Metal Assembly Paste or equivalent to the section of the drive hub that interfaces with the steel drive discs and reassemble the drive & friction disc section according to reference drawing using new friction discs, springs and steel drive discs as necessary.

Alignment of Wave Springs
The beginning of the coil of each wave spring must be placed in the same relative (o-clock) position to the drive hub to ensure equal separation of the drive discs.
Seating of Coil Springs
Coil springs must be flatly seated in the milled holes of the drive discs.

(4) Ensure that drive discs move freely on the drive hub and that the lugs of the friction disc discs move freely in the drive slots of the sleeve.

C. O-RING REPLACEMENT

(1) Separate cylinder and piston.
(2) Inspect O-ring seals (in piston and on drive hub). If worn, replace using new O-rings that have been lubricated with an O-ring lubricant such as Dow Corning® #4 Compound or equivalent.
(3) A thin coat of Dow Corning® #4 Compound should also be applied to the inner walls of the cylinder.

D. REASSEMBLY

(1) Replace the piston.
(2) Lubricate bore of cylinder with an O-ring lubricant such as Dow Corning® #4 Compound or equivalent.
(3) Slide the air cylinder/piston sub-assembly over the drive hub.
(4) Make sure that all components are well seated and replace the outer retainer ring and air seal.
(5) See “Clutch Installation” portion of these instructions for the proper procedure for reinstalling the clutch.

MACH III PRODUCT WARRANTY

Mach III Clutch warrants its products to be free from defects in materials and workmanship for a period of one year from the date of shipment from our factory or from the location of one of our authorized distributors provided the product is properly installed, maintained and has been operated under normal conditions. This warranty shall not apply to products that have been subject to misuse, negligence or accident, or damaged by circumstances beyond the control of Mach III Clutch, or which has been used in a manner contrary to Mach III Clutch instructions or recommendations. Products that have been altered after shipment or repaired without following proper repair procedures, as deemed by Mach III Clutch, are also expressly excluded from this warranty.

Warranty claims shall be made in writing and the product(s) shall, if requested by Mach III Clutch, be returned with transportation charges prepaid for evaluation. Upon our determination that a defect exists, Mach III Clutch, at its sole discretion, will either repair or replace the defective component(s) or product(s).

THIS WARRANTY IS MADE EXPRESSLY IN LIEU OF ANY OTHER WARRANTIES, EXPRESS OR IMPLIED, INCLUDING ANY IMPLIED WARRANTY OF MERCHANTABILITY OR FITNESS FOR A PARTICULAR PURPOSE. THE BUYER'S SOLE AND EXCLUSIVE REMEDY SHALL BE FOR THE REPAIR OR REPLACEMENT OF DEFECTIVE PRODUCTS AS PROVIDED HEREIN AND UNDER NO CIRCUMSTANCES WILL MACH III CLUTCH LIABILITY EXCEED THE PRICE OF THE DEFECTIVE UNITS. THE BUYER AGREES THAT NO OTHER REMEDY (INCLUDING, BUT NOT LIMITED TO, INCIDENTAL OR CONSEQUENTIAL DAMAGES FOR LOST PROFITS, LOST SALES, INJURY TO PERSON OR PROPERTY OR ANY OTHER INCIDENTAL OR CONSEQUENTIAL LOSS) SHALL BE AVAILABLE TO HIM OR HER.

Mach III Clutch neither assumes nor authorizes any person to assume for it any other liability in connection with the sale of its products.

MACH III
Motion Control Solutions

Mach III Clutch
1580 Lake Street
Elmira, NY 14901 USA
www.machiii.com
(859) 291-0849