Combination Clutch-Brake

Through Shaft, Stop & Start the Shaft

X3A2H-STH

Minimum Sprocket Sizes

Chain Size	35	40	50	60
Minimum Teeth	30	23	20	17

Clutch Engagement/Brake Engagement

Air/Spring

Facing Type

High Coefficient

Clutch Torque @ 80 PSI (max) – Dynamic

275 Pound Inches

Brake Torque @ Spring Pressure (fixed)

19 Pound Inches

Brake Release Pressure

15 - 20 PSI

Maximum RPM

1,750

Bore Range with Standard Keyway

0.500 (13) to 0.625 (16) Inches (mm)

Air Volume New

0.19 Cubic Inches

Air Volume Worn

0.69 Cubic Inches

Finish

Aluminum

Open or Enclosed Construction

Open

Shipping Weight

6 Pounds

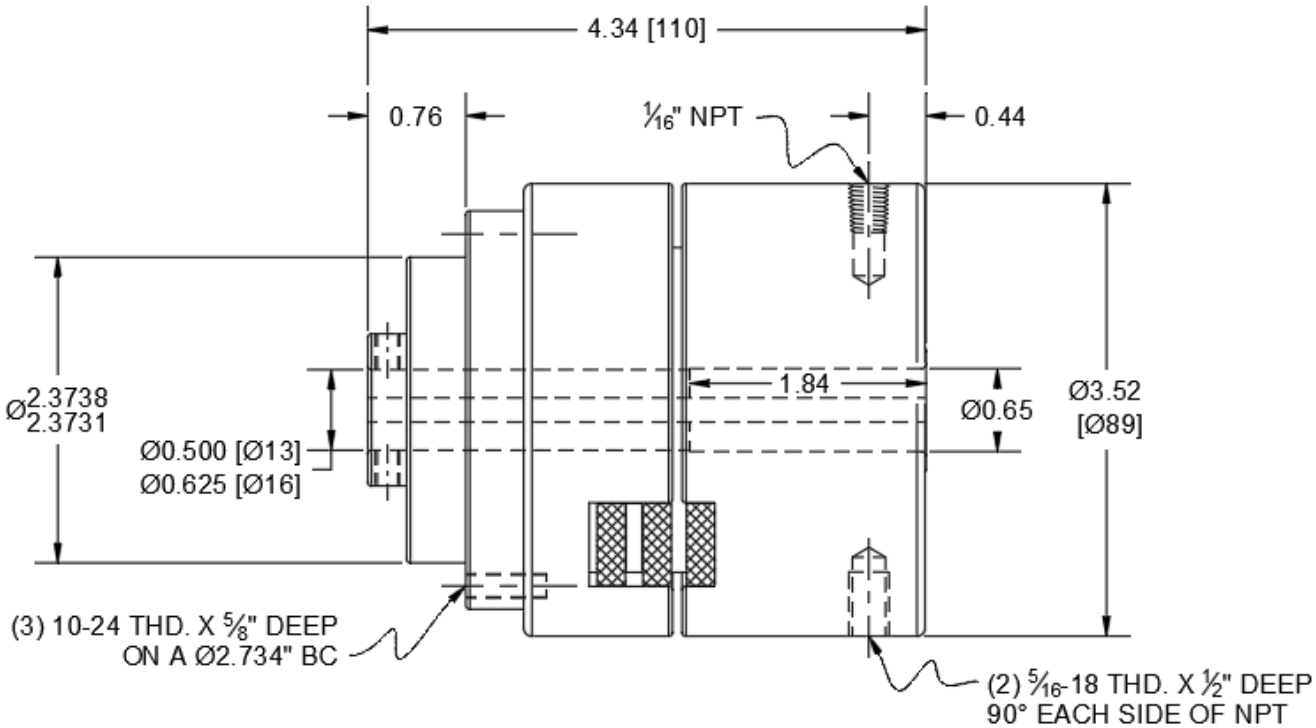

TORQUE vs. AIR PRESSURE

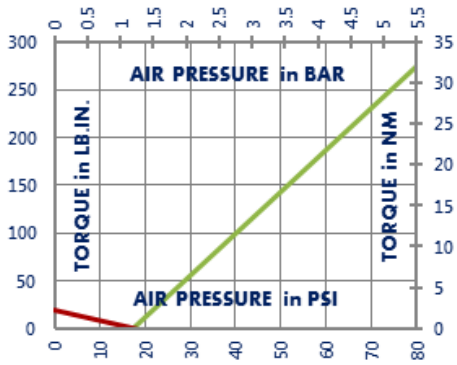

NEW vs. BURNISHED TORQUE

New clutch or brake torque is approximately 40% less than rated design torque until the friction and drive discs are worn in (lapped, burnished). The length of time for wear-in to occur varies by application.

When calculating required torque always use a service factor of 1.5 to 2. It is not recommended to select a product for use at its maximum rated torque for continuous duty.

PRODUCT SELECTION

Torque capacity is only one factor to consider when making a product selection. Insure that you will have right product for the job by contacting our engineering department for application review and selection assistance.

859-291-0849

engineering@machiii.com

www.machiii.com

X3A2H-STH

Parts Diagram

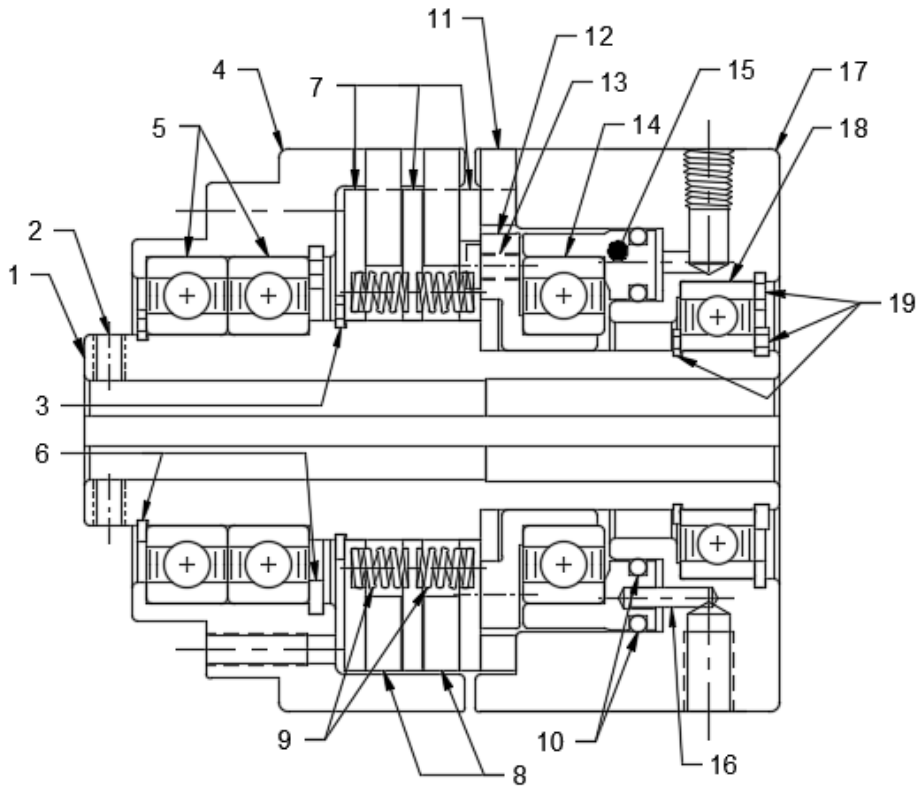

REF#	DESCRIPTION & PARTS INCLUDED	QUANTITY	KIT NUMBER
	DRIVE HUB KIT		W3A2H-STH-HUBK
1	Drive Hub	1	*Specify Bore Size When Ordering*
2	Set Screw	2	
3	Retainer Ring	1	
	SLEEVE KIT		X3A2H-STH-SLVK
4	Sleeve	1	
5	Bearing	2	
6	Retainer Ring	2	
	DRIVE DISC KIT		W3A2H-STH-DRDK
7	Drive Disc	3	
	REPAIR KIT		X3A2H-STH-RPRK
8	Friction Disc	2	
9	Spring	12	
10	O-Ring	2	
11	Brake Friction Disc	1	
	PISTON KIT		X3A2H-STH-PSTK
12	Cone	1	
13	Screw	1	
14	Bearing	1	
15	Piston	1	
	CYLINDER KIT		X3A2H-STH-CYLK
16	Pins	6	
17	Cylinder	1	
18	Bearing	1	
19	Retainer Ring	3	

PARTS KITS

The *Repair Kit* contains common wear items for this product. Users are encouraged to stock one or more repair kits considering the number of units installed and the potential downtime if machinery on which the unit is installed is critical equipment. To obtain current pricing and lead time for parts kits, contact customer service.

orders@machiii.com

ADDITIONAL PRODUCT INFORMATION

Click on the links below or copy and paste into your web browser.

To view the Installation & Maintenance Manual for this product:
http://www.machiii.com/PDF/Product-Manuals/CLUTCHBR_SHAFT_BALLBRG_MANUAL.pdf

For information about the application and use of this and other Mach III products:
http://machiii.com/Application/Default.asp

859-291-0849
engineering@machiii.com
www.machiii.com