Friction Torque Limiter

Shaft to Shaft Mount - Coupling

V6G1G-STL

Momentary Overload Protection

Mechanism DOES NOT support Coupling

Engagement/Disengagement
Spring/None
Facing Type
Low Coefficient
Minimum Torque Setting
310 Pound Inches
Maximum Torque Setting (Spring Compression ≈ 17%)
3,070 Pound Inches
Maximum RPM
1,750
Bore Range with Standard Keyway
1.125 (29) to 2.000 (52) Inches (mm)
Finish
Aluminum
Open or Enclosed Construction
Open
Shipping Weight
31 Pounds

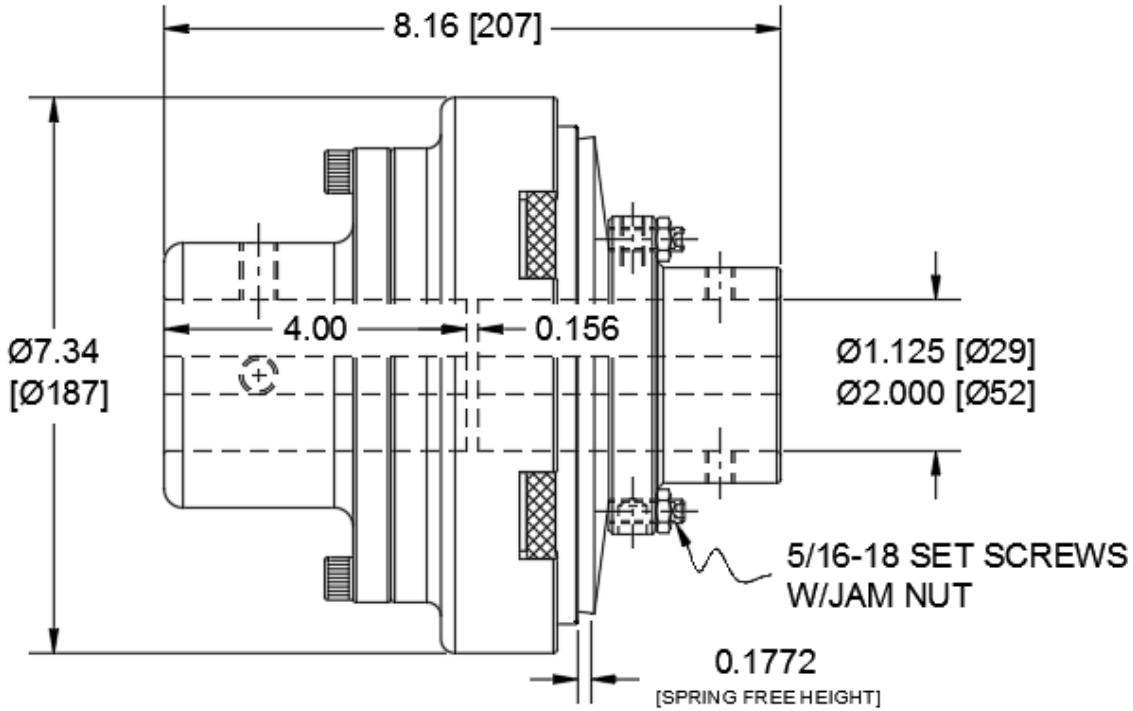

TORQUE vs. SPRING PRESSURE

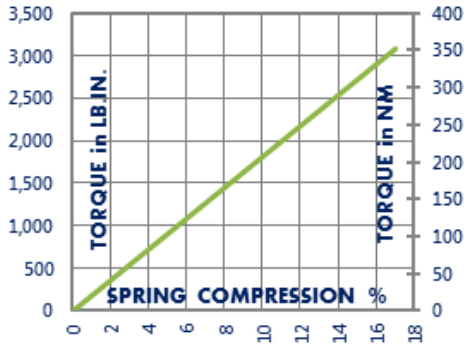

NEW vs. BURNISHED TORQUE

New clutch or brake torque is approximately 40% less than rated design torque until the friction and drive discs are worn in (lapped, burnished). The length of time for wear-in to occur varies by application.

When calculating required torque always use a service factor of 1.5 to 2. It is not recommended to select a product for use at its maximum rated torque for continuous duty.

PRODUCT SELECTION

Torque capacity is only one factor to consider when making a product selection. Insure that you will have right product for the job by contacting our engineering department for application review and selection assistance.

859-291-0849
engineering@machiii.com
www.machiii.com

V6G1G-STL

Parts Diagram

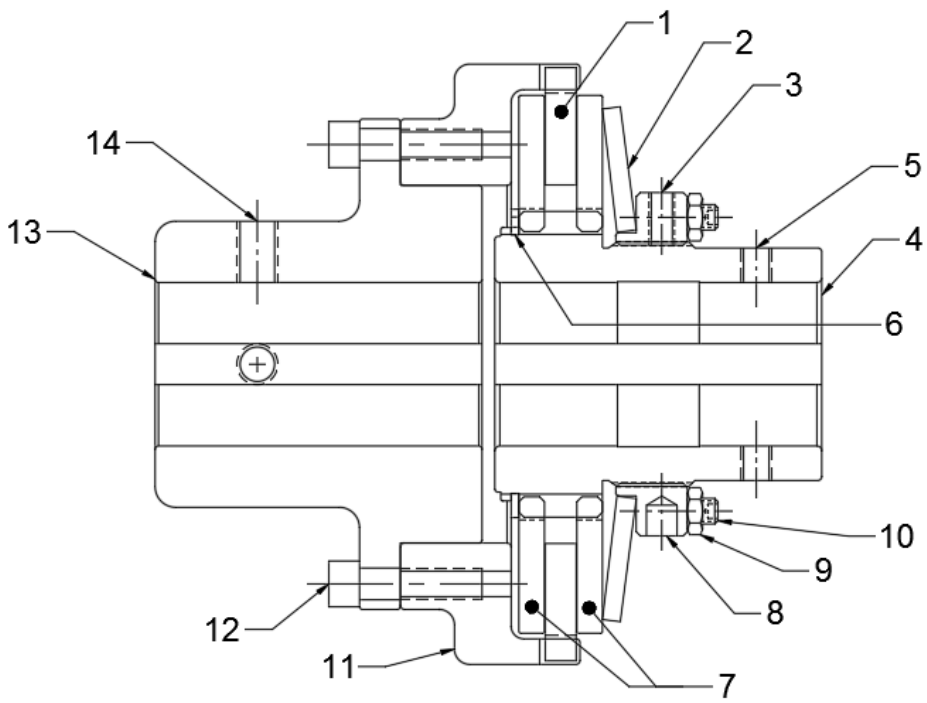

REF#	DESCRIPTION & PARTS INCLUDED	QUANTITY	KIT NUMBER
	REPAIR KIT		V6G1G-STL-RPRK
1	Friction Disc	1	
2	Disc Spring	1	
3	Nylon Point Set Screw	1	
	DRIVE HUB KIT		V6G1G-STL-HUBK
4	Drive Hub	1	*Specify Bore Size When Ordering*
5	Set Screw	2	
6	Retainer Ring	1	
	DRIVE DISC KIT		T6A1G-STL-DRDK
7	Drive Disc	2	
	FACING KIT		V6G1G-STL-FCGK
1	Friction Disc	1	
3	Nylon Point Set Screw	1	
	NUT KIT		T6A1G-STL-NUTK
8	Nut	1	
9	Jam Nut	6	
10	Oval Point Set Screw	6	
3	Nylon Point Set Screw	1	
	COUPLING KIT		V6G1G-STL-CPLK
11	Adapter	1	
12	Screw	6	
13	Coupling	1	*Specify Bore Size When Ordering*
14	Set Screw	2	

PARTS KITS

The *Repair Kit* contains common wear items for this product. Users are encouraged to stock one or more repair kits considering the number of units installed and the potential downtime if machinery on which the unit is installed is critical equipment. To obtain current pricing and lead time for parts kits, contact customer service.

orders@machiii.com

ADDITIONAL PRODUCT INFORMATION

Click on the links below or copy and paste into your web browser.

To view the Installation & Maintenance Manual for this product:
http://www.machiii.com/PDF/Product-Manuals/TORQLIM_MECH_W_COUPL_MANUAL.pdf

For information about the application and use of this and other Mach III products:
http://machiii.com/Application/Default.asp

859-291-0849
engineering@machiii.com
www.machiii.com