Spring Applied Brake

Flange Mount

D8F3K-STH

Engagement/Disengagement	
Spring/Air	
Facing Type	
High Coefficient	
Torque – Dynamic	
4,326 Pound Inches	
Minimum Disengagement Pressure	
57 PSI	
Maximum Operating Pressure	
80 PSI	
Maximum RPM	
1,650	
Bore Range with Standard Keyway	
1.250 (32) to 2.375 (66) Inches (mm)	
Air Volume New	
1.05 Cubic Inches	
Air Volume Worn	
2.10 Cubic Inches	
Finish	
Aluminum	
Open or Enclosed Construction	
Open	
Mounting Bolt Circle	
10.875 Inches	
Shipping Weight	
72 Pounds	

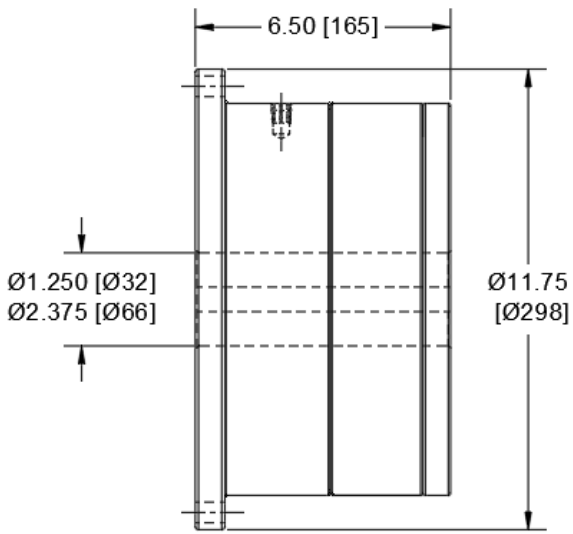

SIDE VIEW

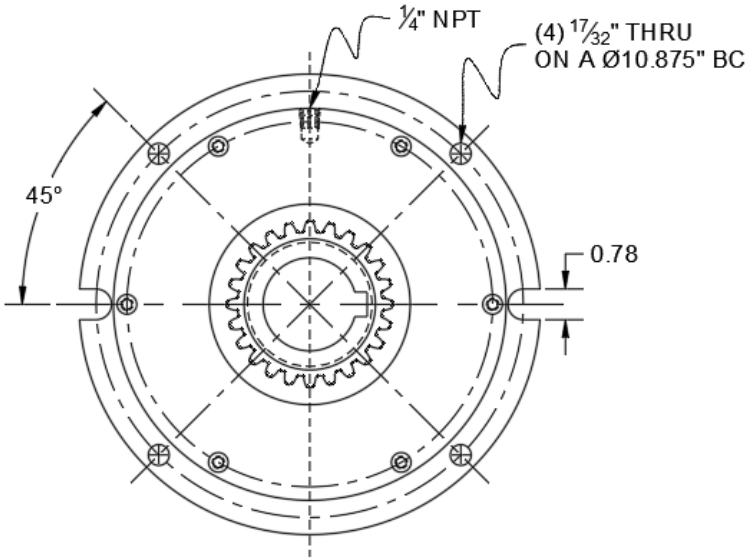

TOP VIEW

TORQUE vs. AIR PRESSURE

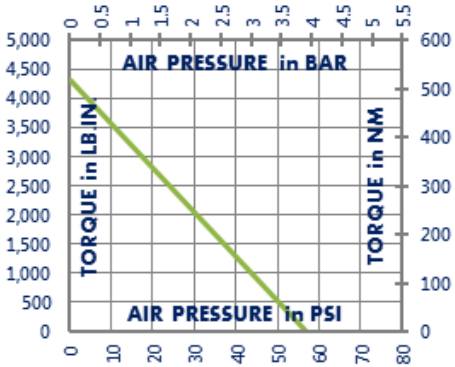

NEW vs. BURNISHED TORQUE

New clutch or brake torque is approximately 40% less than rated design torque until the friction and drive discs are worn in (lapped, burnished). The length of time for wear-in to occur varies by application.

When calculating required torque always use a service factor of 1.5 to 2. It is not recommended to select a product for use at its maximum rated torque for continuous duty.

PRODUCT SELECTION

Torque capacity is only one factor to consider when making a product selection. Insure that you will have right product for the job by contacting our engineering department for application review and selection assistance.

859-291-0849

engineering@machiii.com

www.machiii.com

D8F3K-STH

Parts Diagram

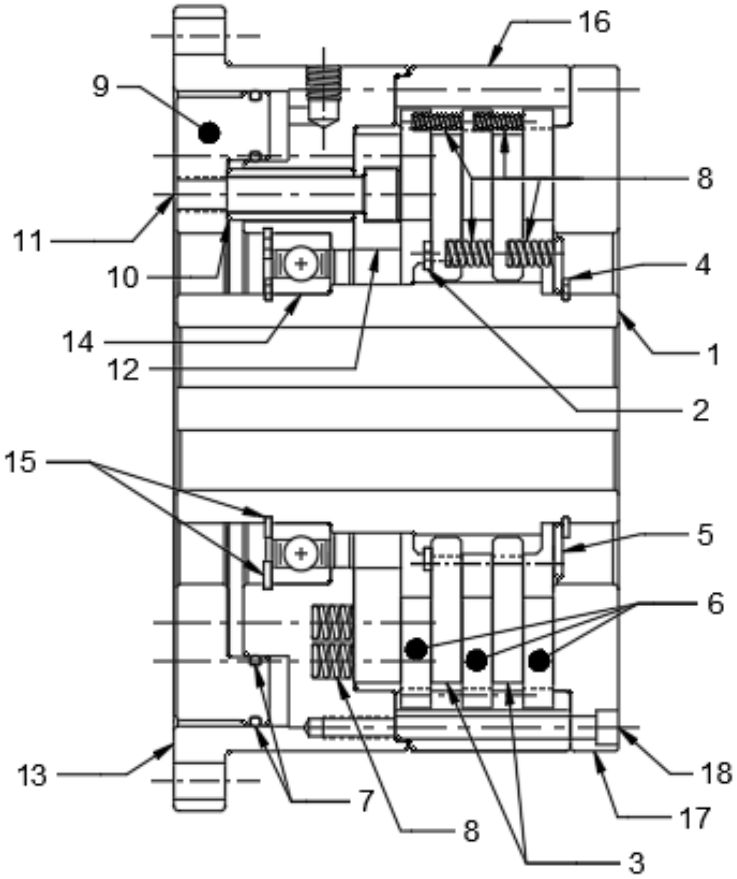

REF#	DESCRIPTION & PARTS INCLUDED	QUANTITY	KIT NUMBER
	DRIVE HUB KIT		D8F3K-STH-HUBK
1	Drive Hub	1	*Specify Bore Size When Ordering*
2	Retainer Ring	1	
	DRIVE DISC KIT		D8F3K-STH-DRDK
3	Drive Disc	2	
4	Retainer Ring	1	
5	Spring Retainer	1	
	REPAIR KIT		D8F3K-STH-RPRK
6	Friction Disc	3	
7	O-Ring	2	
8	Spring	36	
	PISTON KIT		D8F3K-STH-PSTK
9	Piston	1	
10	Spacer	3	
11	Screw	3	
12	Pressure Plate	1	
	CYLINDER KIT		D8F3K-STH-CYLK
13	Cylinder	1	
14	Bearing	1	
15	Retainer Ring	2	
16	Ring Gear	1	
17	Top Plate	1	
18	Screw	6	

PARTS KITS

The *Repair Kit* contains common wear items for this product. Users are encouraged to stock one or more repair kits considering the number of units installed and the potential downtime if machinery on which the unit is installed is critical equipment. To obtain current pricing and lead time for parts kits, contact customer service.

orders@machiii.com

ADDITIONAL PRODUCT INFORMATION

Click on the links below or copy and paste into your web browser.

To view the Installation & Maintenance Manual for this product:
http://machiii.com/PDF/Product-Manuals/BRAKES_FLANGE_SPRING_MANUAL.pdf

For information about the application and use of this and other Mach III products:
http://machiii.com/Application/Default.asp

859-291-0849
engineering@machiii.com
www.machiii.com