# Tension Control Clutch

SensiFlex® Shaft Input

## 58SI

| | |
|---|---|
| **Engagement/Disengagement** | |
| Air/Spring | |
| **Facing Type** | |
| Low Coefficient | |
| **Torque @ 80 PSI – Dynamic** | |
| 222 Pound Inches | |
| **Minimum Engagement Pressure** | |
| 3 - 4 PSI | |
| **Maximum Operating Pressure** | |
| 80 PSI | |
| **Maximum RPM** | |
| 1,750 | |
| **Bore Range with Standard Keyway** | |
| 0.500 (13) to 1.000 (24) Inches (mm) | |
| **Air Volume New** | |
| 0.22 Cubic Inches | |
| **Air Volume Worn** | |
| 1.17 Cubic Inches | |
| **Finish** | |
| Iron | |
| **Open or Enclosed Construction** | |
| Open | |
| **Shipping Weight** | |
| 9 Pounds | |

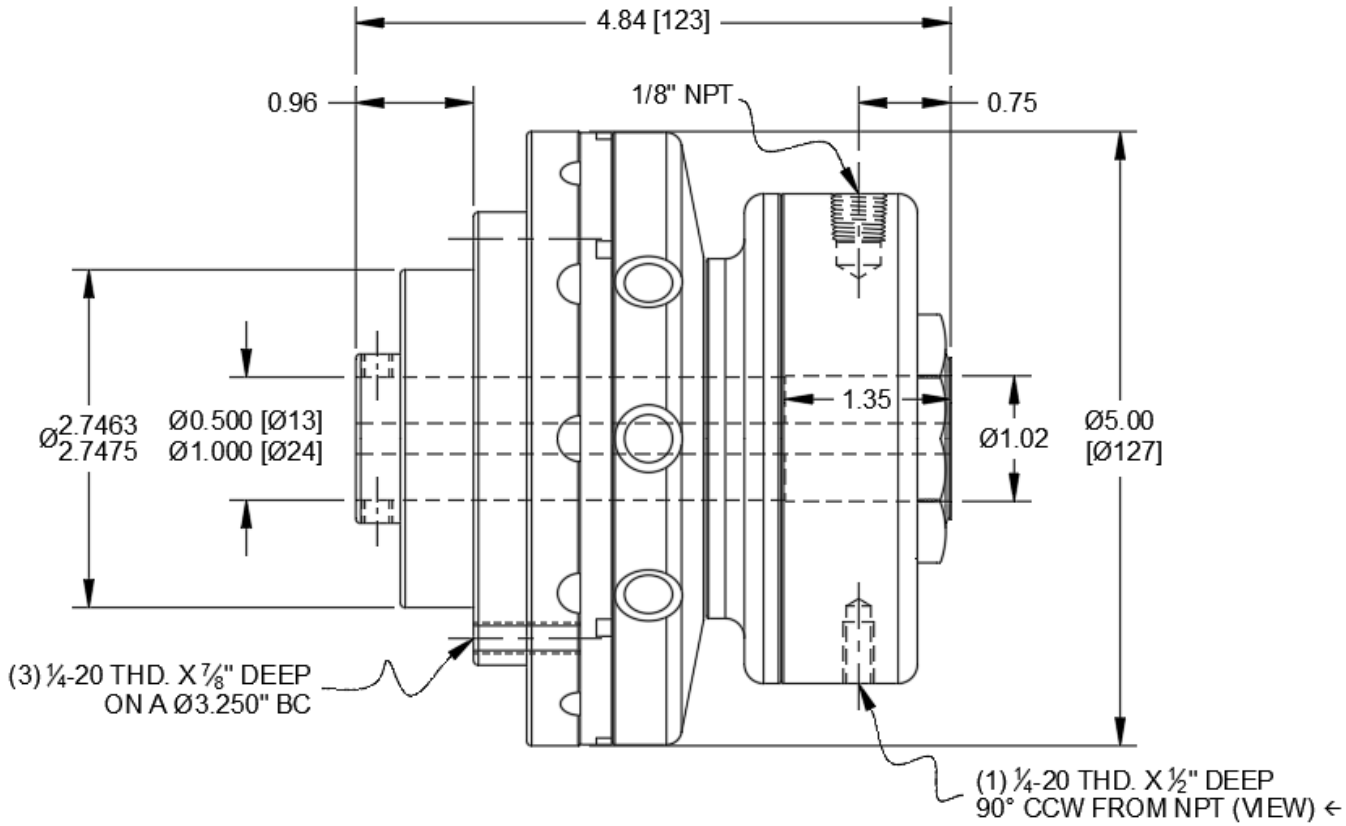


### CONTINUOUS THERMAL HORSEPOWER

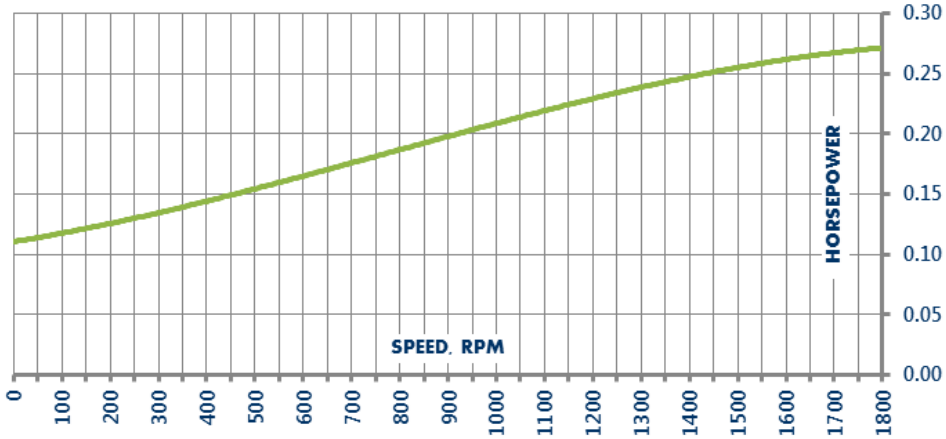



859-291-0849
engineering@machiii.com
www.machiii.com

# 58SI

## Parts Diagram

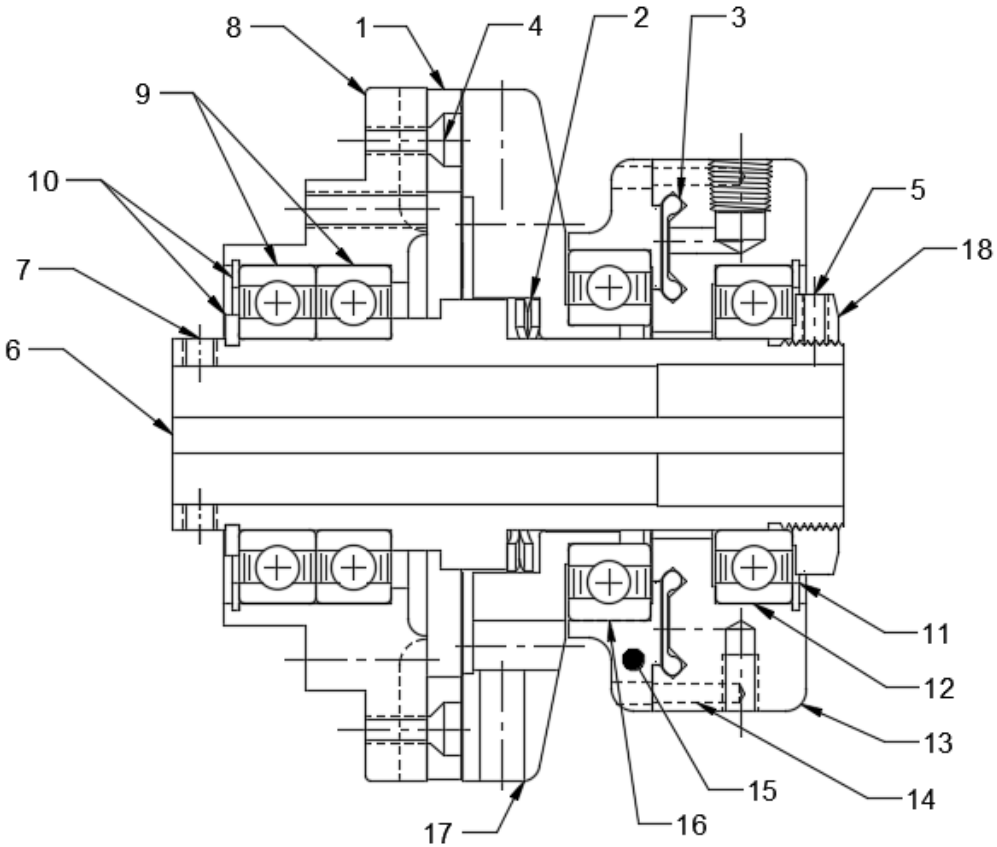


| REF# | DESCRIPTION & PARTS INCLUDED | QUANTITY | KIT NUMBER |
|---|---|---|---|
| | REPAIR KIT | | 58SI-LOCO-RPRK |
| 1 | Friction Disc | 1 | |
| 2 | Wave Spring | 1 | |
| 3 | Diaphragm | 1 | |
| 4 | Screw | 6 | |
| 5 | Nylon Point Set Screw | 1 | |
| | DRIVE HUB KIT | | 58SI-HUBK |
| 6 | Drive Hub | 1 | *Specify Bore Size When Ordering* |
| 7 | Set Screw | 2 | |
| | SLEEVE KIT | | 58SI-SLVK |
| 8 | Sleeve | 1 | |
| 9 | Bearing | 2 | |
| 10 | Retainer Ring | 2 | |
| | CYLINDER KIT | | 58PI-CYLK |
| 11 | Retainer Ring | 1 | |
| 12 | Bearing | 1 | |
| 13 | Cylinder | 1 | |
| 14 | Pin | 2 | |
| | PISTON KIT | | 58SI-PSTK |
| 15 | Piston | 1 | |
| 16 | Bearing | 1 | |
| 17 | Drive Disc | 1 | |
| | FACING KIT | | 58SI-LOCO-FCGK |
| 1 | Friction Disc | 1 | |
| 4 | Screw | 6 | |
| 5 | Nylon Point Set Screw | 1 | |
| | NUT KIT | | 58PI-NUTK |
| 18 | Nut | 1 | |
| 5 | Nylon Point Set Screw | 1 | |

### PARTS KITS

The *Repair Kit* contains common wear items for this product. Users are encouraged to stock one or more repair kits considering the number of units installed and the potential downtime if machinery on which the unit is installed is critical equipment. To obtain current pricing and lead time for parts kits, contact customer service.

**orders@machiii.com**

### ADDITIONAL PRODUCT INFORMATION

Click on the links below or copy and paste into your web browser.

To view the Installation & Maintenance Manual for this product:
**http://www.machiii.com/PDF/Product-Manuals/CLUTCH_SENSIFLEX_SI_MANUAL.pdf**

For information about the application and use of this and other Mach III products:
**http://machiii.com/Application/Default.asp**


**859-291-0849**
**engineering@machiii.com**
**www.machiii.com**